16. Diagnostics for Engine Starting Failure

A: PROCEDURE

1. Check for fuel amount.
↓
2. Inspection of starter motor circuit. <Ref. to EN(H4DOTC)(diag)-65, STARTER MOTOR CIRCUIT, Diagnostics for Engine Starting Failure.>
↓
3. Inspection of ECM power supply and ground line. <Ref. to EN(H4DOTC)(diag)-68, CHECK POWER SUPPLY AND GROUND LINE OF ENGINE CONTROL MODULE (ECM), Diagnostics for Engine Starting Failure.>
↓
4. Inspection of ignition control system. <Ref. to EN(H4DOTC)(diag)-70, IGNITION CONTROL SYSTEM, Diagnostics for Engine Starting Failure.>
↓
5. Inspection of fuel pump circuit. <Ref. to EN(H4DOTC)(diag)-73, FUEL PUMP CIRCUIT, Diagnostics for Engine Starting Failure.>
↓
6. Inspection of fuel injector circuit. <Ref. to EN(H4DOTC)(diag)-74, FUEL INJECTOR CIRCUIT, Diagnostics for Engine Starting Failure.>

B: STARTER MOTOR CIRCUIT

CAUTION:
After repairing or replacing the defective part, perform the Clear Memory Mode <Ref. to EN(H4DOTC)(diag)-53, OPERATION, Clear Memory Mode.> and Inspection Mode <Ref. to EN(H4DOTC)(diag)-43, PROCEDURE, Inspection Mode.>.
WIRING DIAGRAM:

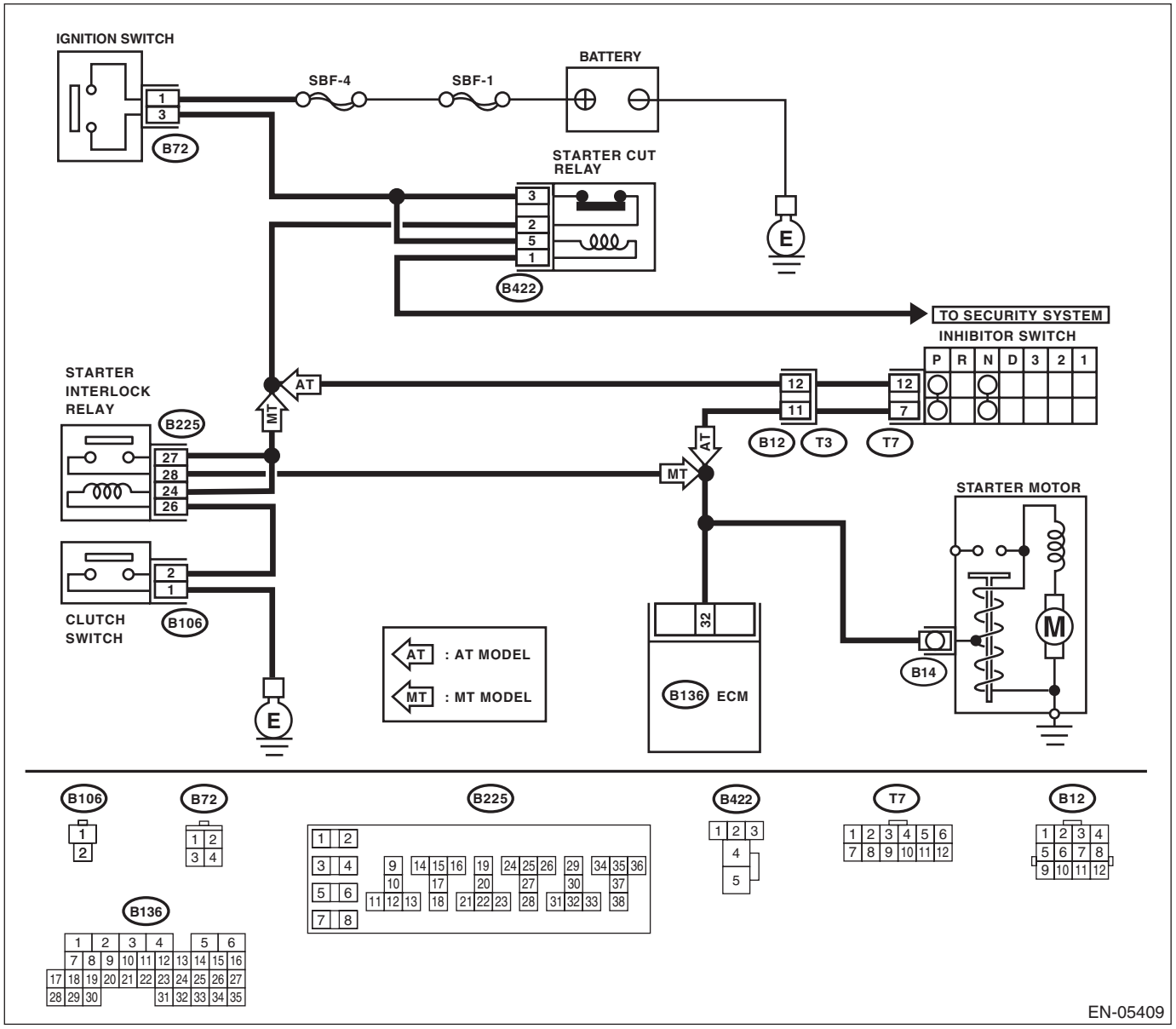

	Step	Check	Yes	No
1	**CHECK BATTERY.** Check the battery voltage.	Is the voltage 12 V or more?	Go to step **2**.	Charge or replace the battery.
2	**CHECK OPERATION OF STARTER MOTOR.**	Does the starter motor operate?	Go to step **3**.	Go to step **4**.
3	**CHECK DTC.**	Is DTC displayed? <Ref. to EN(H4DOTC)(diag)-42, OPERATION, Read Diagnostic Trouble Code (DTC).>	Check the appropriate DTC using the List of Diagnostic Trouble Code (DTC). <Ref. to EN(H4DOTC)(diag)-76, List of Diagnostic Trouble Code (DTC).>	Repair poor contact of the ECM connector.
4	**CHECK INPUT SIGNAL FOR STARTER MOTOR.** 1) Turn the ignition switch to OFF. 2) Disconnect the connector from starter motor. 3) Turn the ignition switch to START. 4) Measure the power supply voltage between starter motor connector terminal and engine ground. ***Connector & terminal*** ***(B14) No. 1 (+) — Engine ground (–):*** NOTE: • For AT model, place the select lever in P or N range. • For MT model, depress the clutch pedal.	Is the voltage 10 V or more?	Check the starter motor. <Ref. to SC(H4SO)-8, Starter.>	Go to step **5**.
5	**CHECK HARNESS BETWEEN BATTERY AND IGNITION SWITCH CONNECTOR.** 1) Disconnect the connector from ignition switch. 2) Measure the power supply voltage between ignition switch connector and chassis ground. ***Connector & terminal*** ***(B72) No. 1 (+) — Chassis ground (–):***	Is the voltage 10 V or more?	Go to step **6**.	Check the following item and repair if necessary. • Blown out of fuse • Open circuit of harness between ignition switch and battery
6	**CHECK IGNITION SWITCH.** 1) Disconnect the connector from ignition switch. 2) Measure the resistance between ignition switch terminals after turning the ignition switch to START position. ***Terminals*** ***No. 1 — No. 3:***	Is the resistance less than 5 Ω?	Go to step **7**.	Replace the ignition switch. <Ref. to SL-45, Ignition Key Lock.>
7	**CHECK TRANSMISSION TYPE.**	Is the transmission type AT?	Go to step **8**.	Go to step **10**.
8	**CHECK INPUT VOLTAGE OF INHIBITOR SWITCH.** 1) Turn the ignition switch to OFF. 2) Disconnect the connector from inhibitor switch. 3) Connect the connector to ignition switch. 4) Measure the input voltage between inhibitor switch connector and chassis ground after turning the ignition switch to START position. ***Connector & terminal*** ***(B12) No. 12 (+) — Engine ground (–):***	Is the voltage 10 V or more?	Go to step **9**.	Repair the open or ground short circuit of harness between inhibitor switch and ignition switch. NOTE: Check the security system. <Ref. to SL-21, Security System.>

Step		Check	Yes	No
9	**CHECK INHIBITOR SWITCH.** 1) Place the select lever in “P” or “N” range. 2) Measure the resistance between inhibitor switch terminals. ***Connector & terminal*** ***(T3) No. 11 — No. 12:***	Is the resistance less than 1 Ω?	Repair the open or ground short circuit of harness between inhibitor switch and starter motor.	Replace the inhibitor switch. <Ref. to 4AT-47, Inhibitor Switch.>
10	**CHECK INPUT VOLTAGE OF STARTER INTERLOCK RELAY.** 1) Turn the ignition switch to OFF. 2) Disconnect the connector from starter interlock relay. 3) Connect the connector to ignition switch. 4) Measure the input voltage between starter interlock relay connector and chassis ground after turning the ignition switch to START position. ***Connector & terminal*** ***(B225) No. 27 (+) — Chassis ground (–):*** ***(B225) No. 24 (+) — Chassis ground (–):***	Is the voltage 10 V or more?	Go to step **11**.	Repair open or ground short circuit of harness between starter interlock relay and ignition switch. NOTE: Check the security system. <Ref. to SL-21, Security System.>
11	**CHECK STARTER INTERLOCK RELAY.** 1) Connect the battery to starter interlock relay terminals No. 26 and No. 24. 2) Measure the resistance between starter interlock relay terminals. ***Terminals*** ***No. 27 — No. 28:***	Is the resistance less than 1 Ω?	Go to step **12**.	Replace the starter interlock relay.
12	**CHECK GROUND CIRCUIT OF CLUTCH SWITCH.** 1) Disconnect the connector from clutch switch. 2) Measure the resistance between the clutch switch connector and chassis ground. ***Connector & terminal*** ***(B106) No. 1 — Chassis ground:***	Is the resistance less than 5 Ω?	Go to step **13**.	Repair the open circuit of ground cable.
13	**CHECK CLUTCH SWITCH.** Measure the resistance between clutch switch terminals while depressing the clutch pedal. ***Terminals*** ***No. 1 — No. 2:***	Is the resistance less than 1 Ω?	Go to step **14**.	Replace the clutch switch. <Ref. to CL-34, Clutch Switch.>
14	**CHECK CLUTCH SWITCH CIRCUIT.** 1) Connect the connector to the clutch switch. 2) Measure the resistance between starter interlock relay connector and chassis ground while depressing the clutch pedal. ***Connector & terminal*** ***(B225) No. 26 — Chassis ground:***	Is the resistance less than 1 Ω?	Repair the ground short of the harness between starter interlock relay and starter motor.	Repair the open circuit of harness between the starter interlock relay and the clutch switch.

C: CHECK POWER SUPPLY AND GROUND LINE OF ENGINE CONTROL MODULE (ECM)

CAUTION:

After repairing or replacing the defective part, perform the Clear Memory Mode <Ref. to EN(H4DOTC)(diag)-53, OPERATION, Clear Memory Mode.> and Inspection Mode <Ref. to EN(H4DOTC)(diag)-43, PROCEDURE, Inspection Mode.>.

WIRING DIAGRAM:

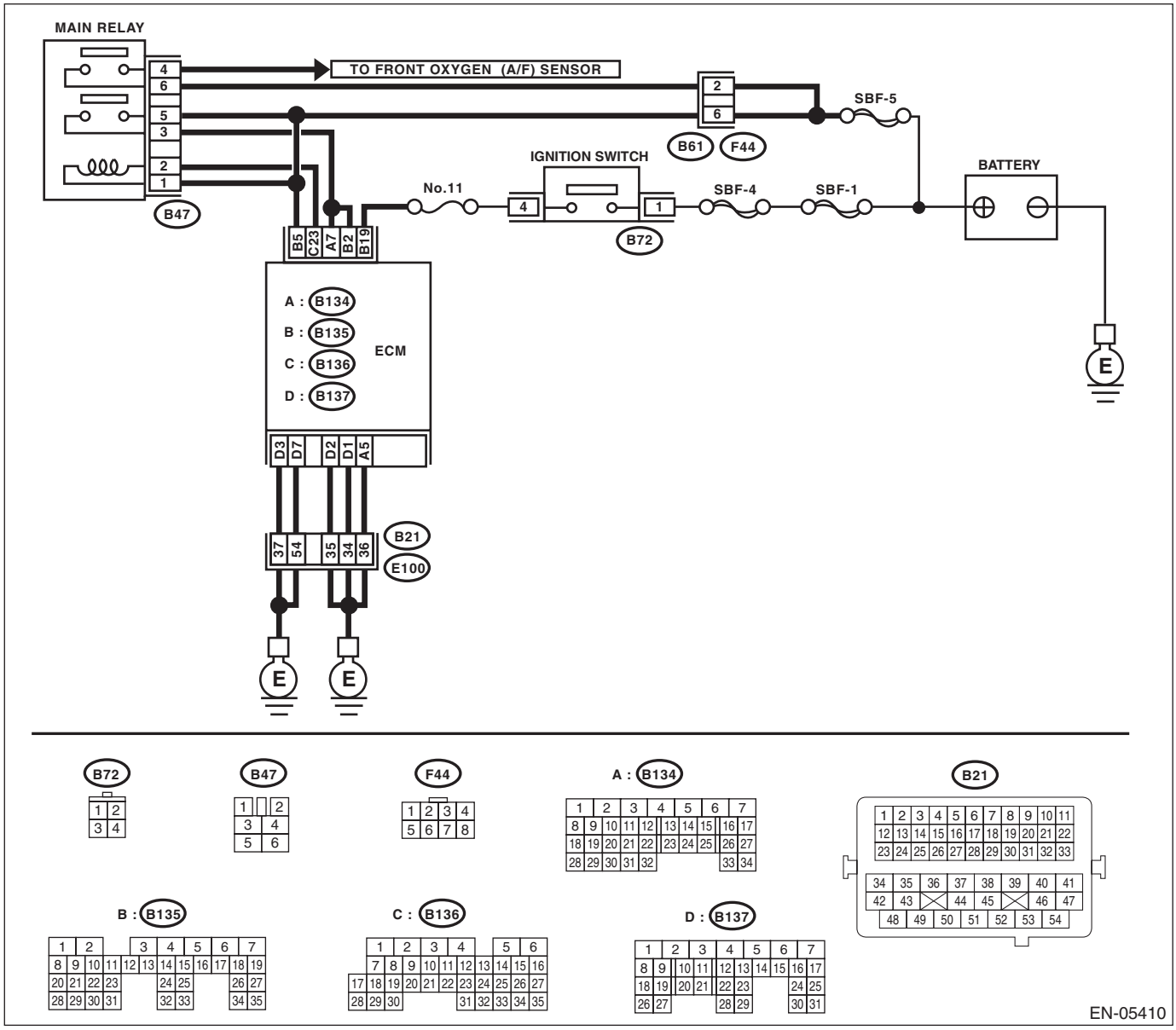

	Step	Check	Yes	No
1	**CHECK MAIN RELAY.** 1) Turn the ignition switch to OFF. 2) Remove the main relay. 3) Connect the battery to the main relay terminals No. 1 and No. 2. 4) Measure the resistance between main relay terminals. ***Terminals*** ***No. 3 — No. 5:*** ***No. 4 — No. 6:***	Is the resistance less than 10 Ω?	Go to step **2**.	Replace the main relay. <Ref. to EN(H4DOTC)(diag)-8, Electrical Component Location.>
2	**CHECK GROUND CIRCUIT FOR ECM.** 1) Disconnect the connectors from the ECM. 2) Measure the resistance of harness between ECM and chassis ground. ***Connector & terminal*** ***(B134) No. 5 — Chassis ground:*** ***(B137) No. 1 — Chassis ground:*** ***(B137) No. 2 — Chassis ground:*** ***(B137) No. 3 — Chassis ground:*** ***(B137) No. 7 — Chassis ground:***	Is the resistance less than 5 Ω?	Go to step **3**.	Repair the open circuit of harness between the ECM and engine ground terminal.
3	**CHECK INPUT VOLTAGE OF ECM.** 1) Turn the ignition switch to ON. 2) Measure the voltage between ECM and chassis ground. ***Connector & terminal*** ***(B135) No. 5 (+) — Chassis ground (–):*** ***(B135) No. 19 (+) — Chassis ground (–):***	Is the voltage 10 V or more?	Go to step **4**.	Repair the open or ground short circuit of power supply circuit.
4	**CHECK INPUT VOLTAGE OF MAIN RELAY.** Measure the voltage between main relay connector and chassis ground. ***Connector & terminal*** ***(B47) No. 1 (+) — Chassis ground (–):*** ***(B47) No. 5 (+) — Chassis ground (–):*** ***(B47) No. 6 (+) — Chassis ground (–):***	Is the voltage 10 V or more?	Go to step **5**.	Repair the open or ground short circuit of harness of power supply circuit.
5	**CHECK INPUT VOLTAGE OF ECM.** 1) Turn the ignition switch to OFF. 2) Connect the main relay connector. 3) Turn the ignition switch to ON. 4) Measure the voltage between ECM and chassis ground. ***Connector & terminal*** ***(B134) No. 7 (+) — Chassis ground (–):*** ***(B135) No. 2 (+) — Chassis ground (–):*** ***(B136) No. 23 (+) — Chassis ground (–):***	Is the voltage 10 V or more?	Check ignition control system. <Ref. to EN(H4DOTC)(diag)-70, IGNITION CONTROL SYSTEM, Diagnostics for Engine Starting Failure.>	Repair the open or ground short circuit of harness between ECM and main relay connector.

D: IGNITION CONTROL SYSTEM

CAUTION:
After repairing or replacing the defective part, perform the Clear Memory Mode <Ref. to EN(H4DOTC)(diag)-53, OPERATION, Clear Memory Mode.> and Inspection Mode <Ref. to EN(H4DOTC)(diag)-43, PROCEDURE, Inspection Mode.>.
WIRING DIAGRAM:

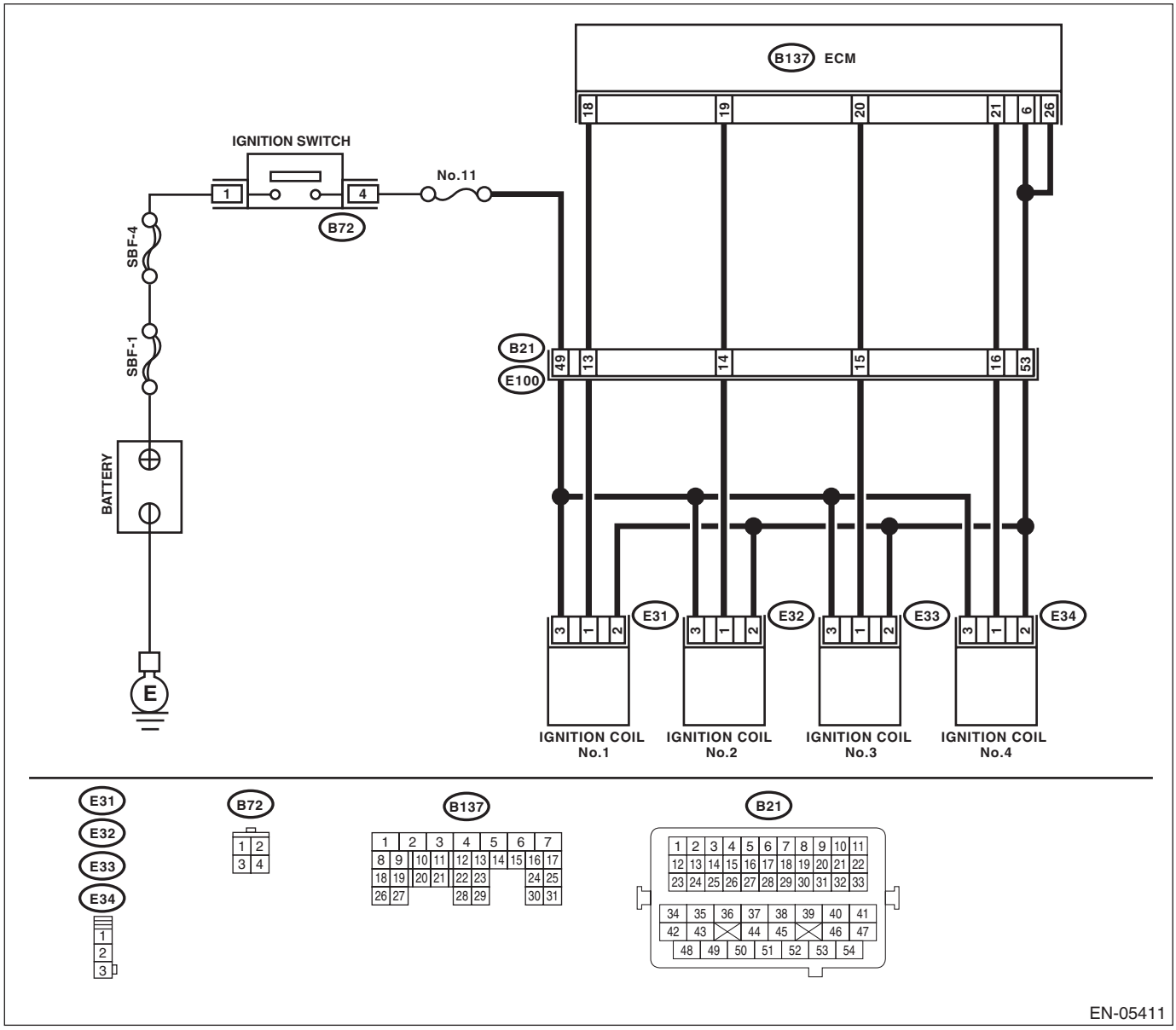

	Step	Check	Yes	No
1	**CHECK SPARK PLUG CONDITION.** 1) Remove the spark plug. <Ref. to IG(H4DOTC)-4, INSTALLATION, Spark Plug.> 2) Check the spark plug condition. <Ref. to IG(H4DOTC)-5, INSPECTION, Spark Plug.>	Is the spark plug condition normal?	Go to step **2**.	Replace the spark plug. <Ref. to IG(H4DOTC)-4, Spark Plug.>
2	**CHECK IGNITION SYSTEM FOR SPARKS.** 1) Connect the spark plug to ignition coil. 2) Release the fuel pressure. <Ref. to FU(H4DOTC)-55, RELEASING OF FUEL PRESSURE, PROCEDURE, Fuel.> 3) Contact the spark plug thread portion to engine. 4) While opening the throttle valve fully, crank the engine to check that spark occurs at each cylinder.	Does spark occur at each cylinder?	Check fuel pump system. <Ref. to EN(H4DOTC)(diag)-73, FUEL PUMP CIRCUIT, Diagnostics for Engine Starting Failure.>	Go to step **3**.
3	**CHECK POWER SUPPLY CIRCUIT FOR IGNITION COIL.** 1) Turn the ignition switch to OFF. 2) Disconnect the connector from ignition coil. 3) Turn the ignition switch to ON. 4) Measure the power supply voltage between ignition coil connector and engine ground. ***Connector & terminal*** ***(E31) No. 3 (+) — Engine ground (–):*** ***(E32) No. 3 (+) — Engine ground (–):*** ***(E33) No. 3 (+) — Engine ground (–):*** ***(E34) No. 3 (+) — Engine ground (–):***	Is the voltage 10 V or more?	Go to step **4**.	Repair the harness and connector. NOTE: In this case, repair the following item: • Open circuit of harness between ignition coil and ignition switch connector • Poor contact of coupling connector
4	**CHECK HARNESS OF IGNITION COIL GROUND CIRCUIT.** 1) Turn the ignition switch to OFF. 2) Measure the resistance between the ignition coil connector and the engine ground. ***Connector & terminal*** ***(E31) No. 2 — Engine ground:*** ***(E32) No. 2 — Engine ground:*** ***(E33) No. 2 — Engine ground:*** ***(E34) No. 2 — Engine ground:***	Is the resistance less than 5 Ω?	Go to step **5**.	Repair the harness and connector. NOTE: In this case, repair the following item: • Open circuit of harness between the ignition coil connector and engine ground terminal
5	**CHECK HARNESS BETWEEN ECM AND IGNITION COIL CONNECTOR.** 1) Disconnect the connectors from the ECM. 2) Disconnect the connector from ignition coil. 3) Measure the resistance of harness between the ECM and ignition coil connector. ***Connector & terminal*** ***(B137) No. 18 — (E31) No. 1:*** ***(B137) No. 19 — (E32) No. 1:*** ***(B137) No. 20 — (E33) No. 1:*** ***(B137) No. 21 — (E34) No. 1:***	Is the resistance less than 1 Ω?	Go to step **6**.	Repair the harness and connector. NOTE: In this case, repair the following item: • Open circuit of harness between the ECM and ignition coil connector • Poor contact of coupling connector
6	**CHECK HARNESS BETWEEN ECM AND IGNITION COIL CONNECTOR.** Measure the resistance of harness between ECM and engine ground. ***Connector & terminal*** ***(B137) No. 18 — Engine ground:*** ***(B137) No. 19 — Engine ground:*** ***(B137) No. 20 — Engine ground:*** ***(B137) No. 21 — Engine ground:***	Is the resistance 1 MΩ or more?	Go to step **7**.	Repair the ground short circuit of harness between the ECM and ignition coil connector.

Step		Check	Yes	No
7	**CHECK POOR CONTACT.** Check for poor contact of the ECM connector.	Is there poor contact in ECM connector?	Repair poor contact of the ECM connector.	Replace the ignition coil. <Ref. to IG(H4DOTC)-6, Ignition Coil.>

E: FUEL PUMP CIRCUIT

CAUTION:
After repairing or replacing the defective part, perform the Clear Memory Mode <Ref. to EN(H4DOTC)(diag)-53, OPERATION, Clear Memory Mode.> and Inspection Mode <Ref. to EN(H4DOTC)(diag)-43, PROCEDURE, Inspection Mode.>.
WIRING DIAGRAM:

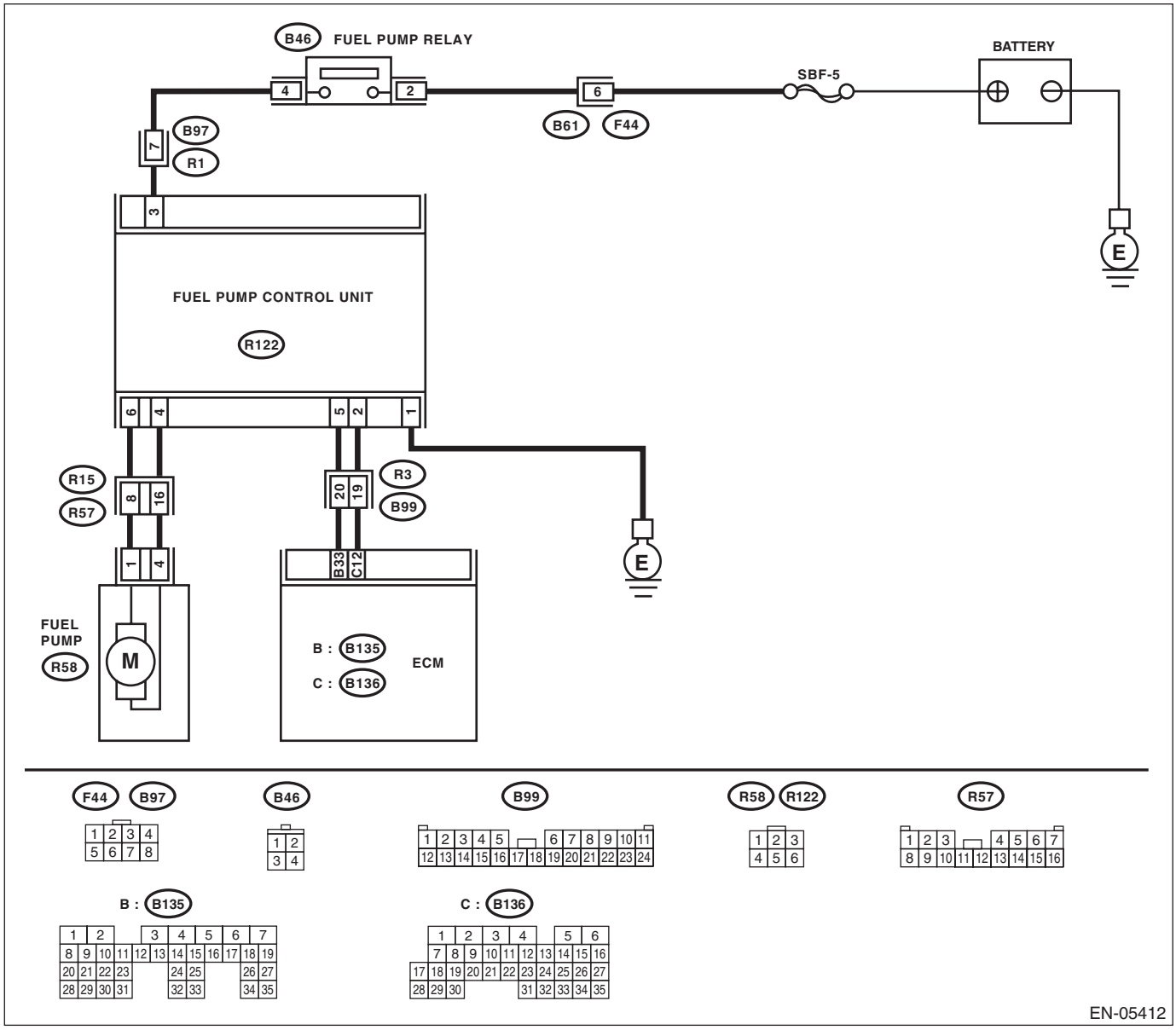

Step		Check	Yes	No
1	**CHECK OPERATING SOUND OF FUEL PUMP.** Make sure that the fuel pump operates for two seconds when turning the ignition switch to ON. NOTE: Fuel pump operation check can also be executed using Subaru Select Monitor. Regarding the procedures, refer to “Compulsory Valve Operation Check Mode”. <Ref. to EN(H4DOTC)(diag)-54, Compulsory Valve Operation Check Mode.>	Does the fuel pump emit operating sound?	Check the fuel injector circuit. <Ref. to EN(H4DOTC)(diag)-74, FUEL INJECTOR CIRCUIT, Diagnostics for Engine Starting Failure.>	Display the DTC. <Ref. to EN(H4DOTC)(diag)-42, OPERATION, Read Diagnostic Trouble Code (DTC).>

F: FUEL INJECTOR CIRCUIT

CAUTION:
- **Check or repair only faulty parts.**
- **After repairing or replacing the defective part, perform the Clear Memory Mode <Ref. to EN(H4DOTC)(diag)-53, OPERATION, Clear Memory Mode.> and Inspection Mode <Ref. to EN(H4DOTC)(diag)-43, PROCEDURE, Inspection Mode.>.**

WIRING DIAGRAM:

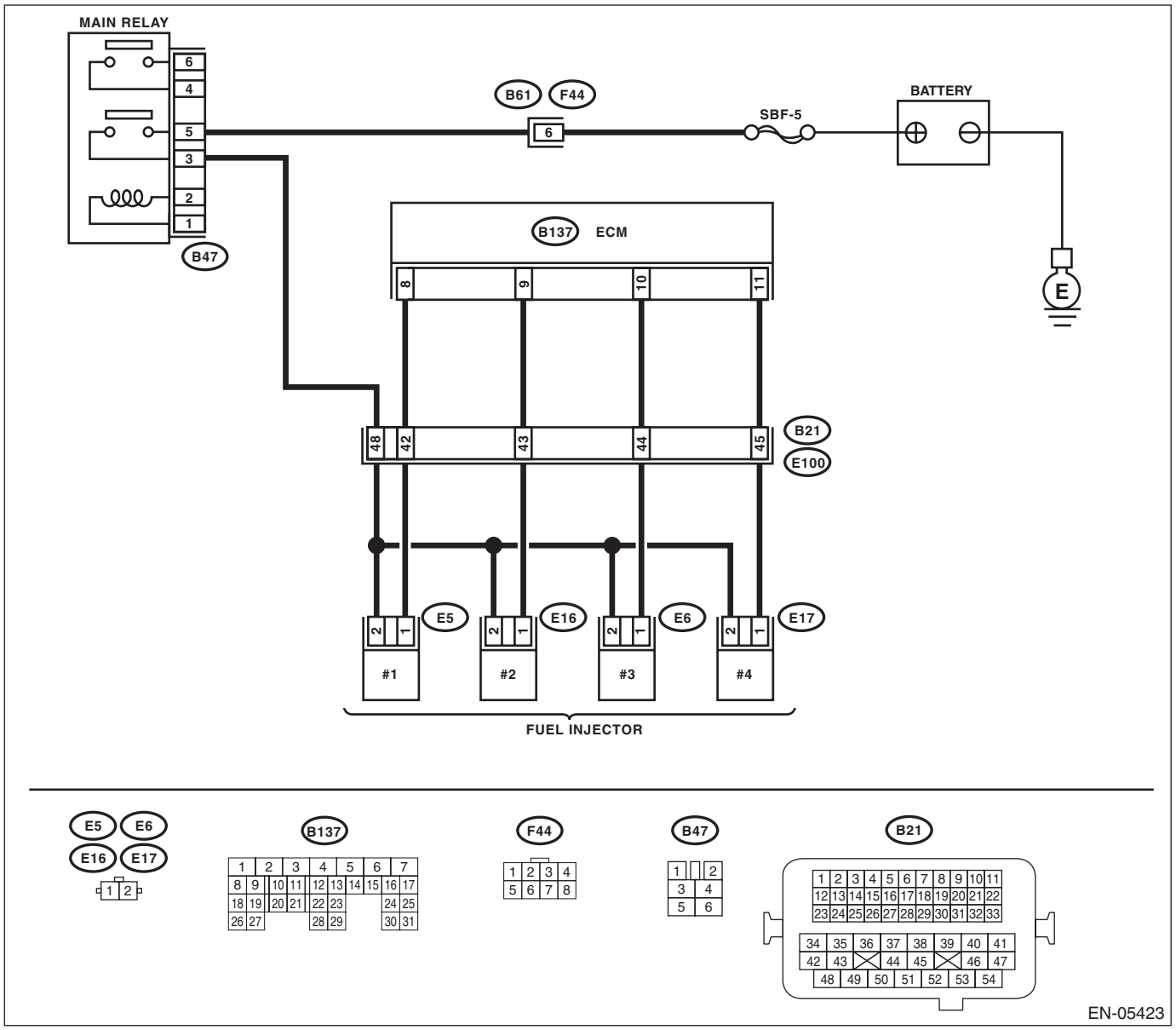

	Step	Check	Yes	No
1	**CHECK OPERATION OF EACH FUEL INJECTOR.** While cranking the engine, check each fuel injector emits operating sound. To perform this check, use a sound scope, or listen by placing a screw driver against the injector and the other end to your ear.	Does the fuel injector emit operating sound?	Check the fuel pressure. <Ref. to ME(H4DOTC)-31, INSPECTION, Fuel Pressure.>	Go to step **2**.
2	**CHECK POWER SUPPLY TO EACH FUEL INJECTOR.** 1) Turn the ignition switch to OFF. 2) Disconnect the connector from fuel injector. 3) Turn the ignition switch to ON. 4) Measure the power supply voltage between fuel injector terminal and engine ground. ***Connector & terminal*** ***#1 (E5) No. 2 (+) — Engine ground (–):*** ***#2 (E16) No. 2 (+) — Engine ground (–):*** ***#3 (E6) No. 2 (+) — Engine ground (–):*** ***#4 (E17) No. 2 (+) — Engine ground (–):***	Is the voltage 10 V or more?	Go to step **3**.	Repair the harness and connector. NOTE: In this case, repair the following item: • Open circuit of harness between main relay and fuel injector connector • Poor contact of main relay connector • Poor contact of coupling connector • Poor contact of fuel injector connector
3	**CHECK HARNESS BETWEEN ECM AND FUEL INJECTOR CONNECTOR.** 1) Turn the ignition switch to OFF. 2) Disconnect the connectors from the ECM. 3) Measure the resistance of harness between ECM and fuel injector connector. ***Connector & terminal*** ***(B137) No. 8 — (E5) No. 1:*** ***(B137) No. 9 — (E16) No. 1:*** ***(B137) No. 10 — (E6) No. 1:*** ***(B137) No. 11 — (E17) No. 1:***	Is the resistance less than 1 Ω?	Go to step **4**.	Repair the harness and connector. NOTE: In this case, repair the following item: • Open circuit of harness between ECM and fuel injector connector • Poor contact of coupling connector
4	**CHECK HARNESS BETWEEN ECM AND FUEL INJECTOR CONNECTOR.** Measure the resistance of harness between ECM and fuel injector connector. ***Connector & terminal*** ***(B137) No. 8 — Chassis ground:*** ***(B137) No. 9 — Chassis ground:*** ***(B137) No. 10 — Chassis ground:*** ***(B137) No. 11 — Chassis ground:***	Is the resistance less than 1 Ω?	Repair the ground short circuit of harness between ECM and fuel injector connector.	Go to step **5**.
5	**CHECK EACH FUEL INJECTOR.** 1) Turn the ignition switch to OFF. 2) Measure the resistance between each fuel injector terminals. ***Terminals*** ***No. 1 — No. 2:***	Is the resistance between 5 — 20 Ω?	Go to step **6**.	Replace the faulty fuel injector. <Ref. to FU(H4DOTC)-37, Fuel Injector.>
6	**CHECK POOR CONTACT.** Check for poor contact of the ECM connector.	Is there poor contact in ECM connector?	Repair poor contact of the ECM connector.	Inspection using “General Diagnostic Table”. <Ref. to EN(H4DOTC)(diag)-378, INSPECTION, General Diagnostic Table.>